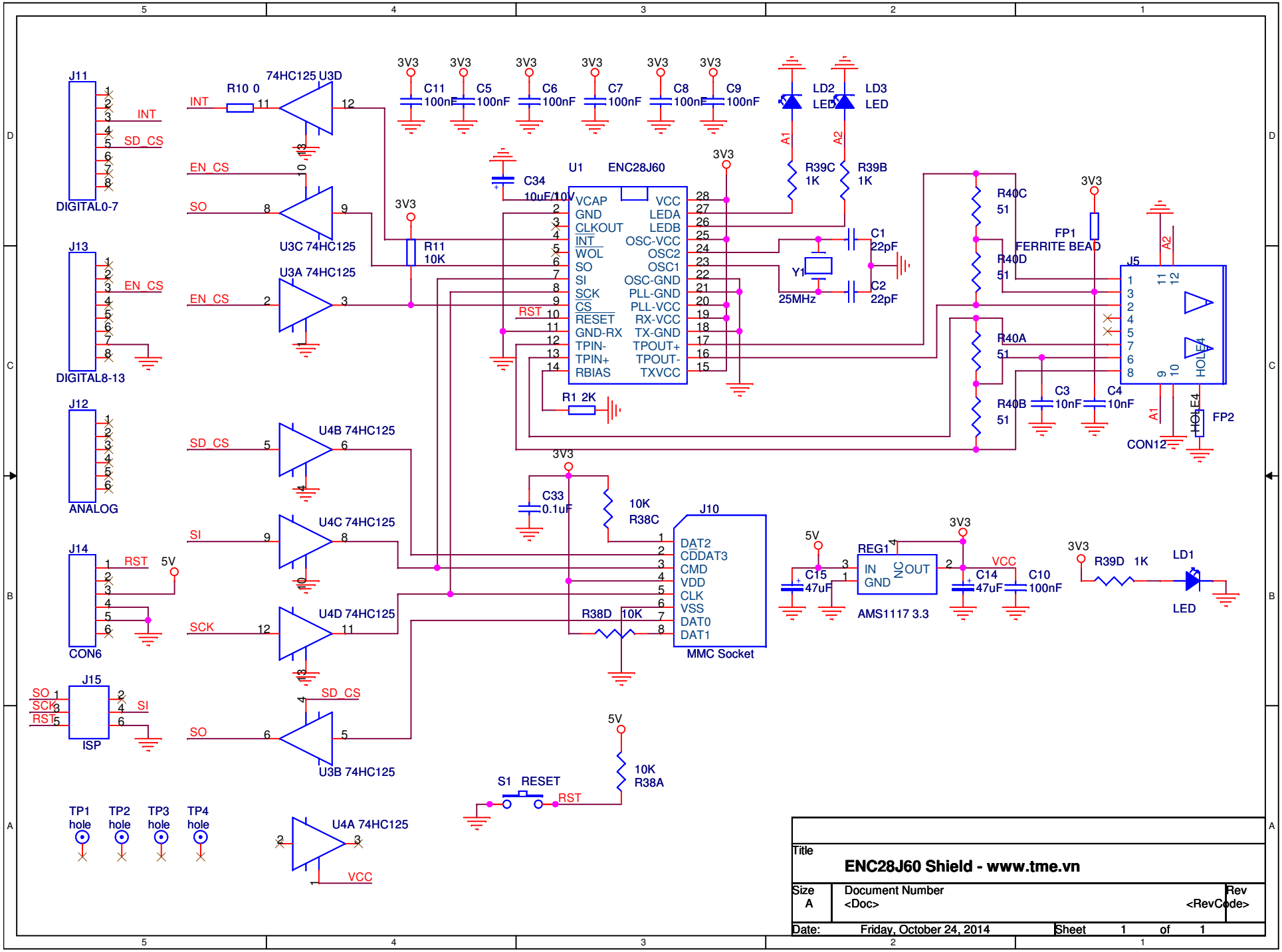

Title
ENC28J60 Shield - www.tme.vn

Size	Document Number	Rev
A	<Doc>	<RevCode>

Date: Friday, October 24, 2014 Sheet 1 of 1