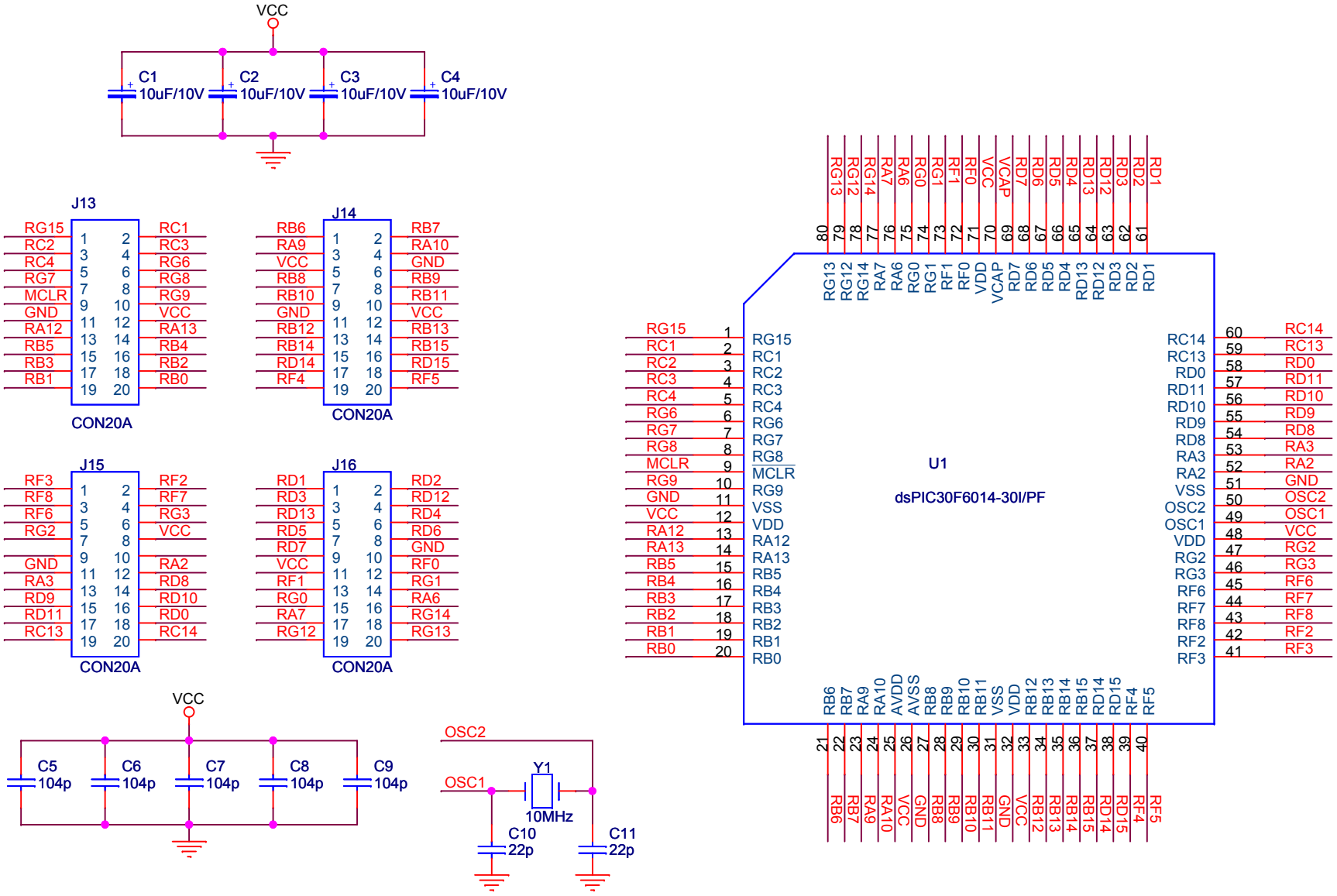

Title	TMe - dsPIC30F6014 MCU CARD	
Size A	Document Number	Rev <RevCo
Date: Saturday, October 30, 2010	Sheet 1 of 1	