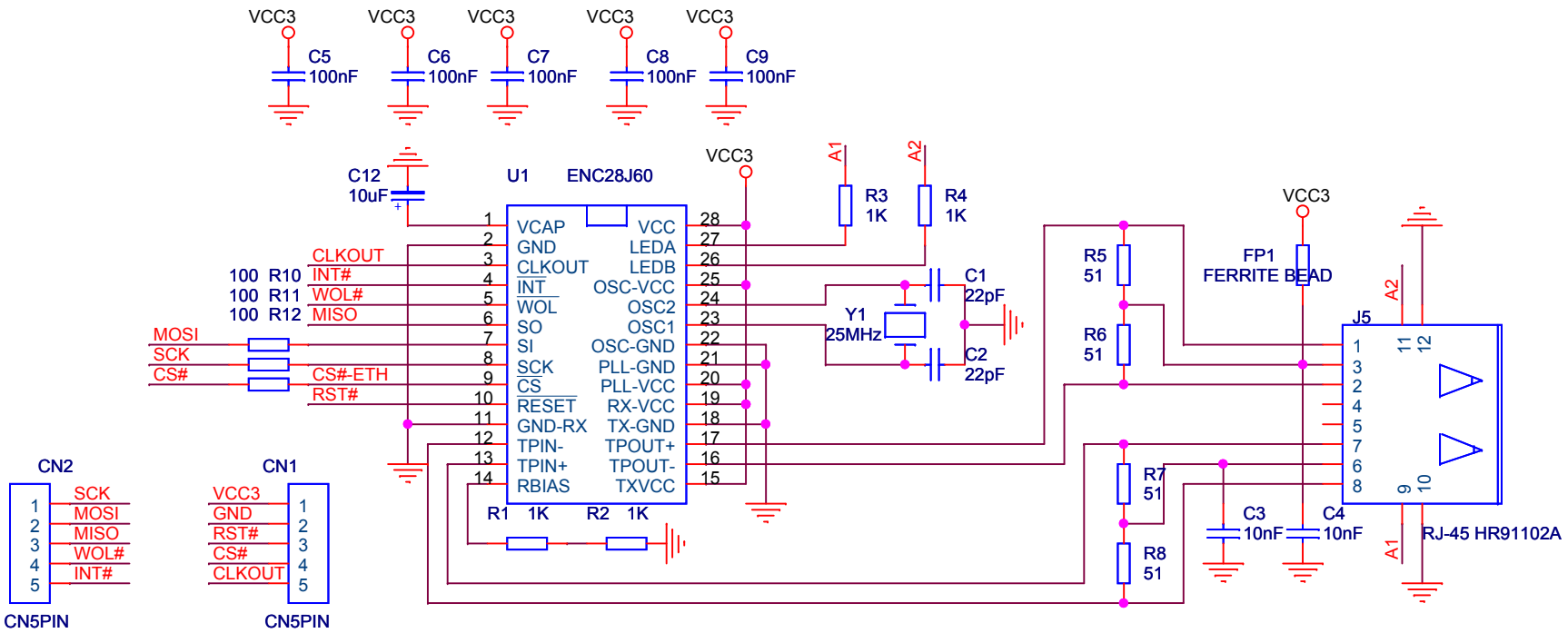

Title

ENC28j60 Ethernet Development BOARD - www.tme.com.vn

Size	Document Number	Rev
A	<Doc>	<RevCode>

Date: Friday, September 11, 2009 Sheet 1 of 1